Data Sheet:

LG-NY30-2



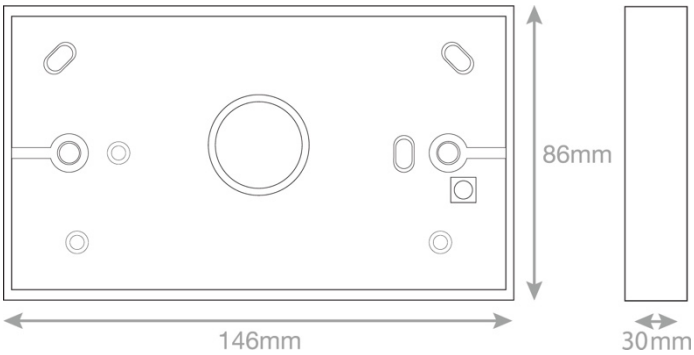

Code:	LG-NY30-2
Description:	2 Gang Surface Pattress Box - 30mm Deep - ABS
Range:	Selectric Square
Colour:	White
Material:	Acrylonitrile Butadiene Styrene (ABS)
Weight:	0.108kg
Inner Carton Quantity:	10
Inner Carton Weight:	1.08kg
Guarantee:	25 years
Barcode:	5025117005255
Commodity Code:	8536 909500
Standards:	BS 5733
Packaging:	Bulk
ASTA Approval:	No
Notes:	• Surface mount Pattress are used for electrical accessories that sit on the surface of walls. The Pattress is screwed in place, and knockouts are provided for cable entry • Knockouts providing many mounting options • Heat and impact resistant

Selectric reserves the right to withdraw, improve, or modify any design without prior notification.
Selectric cannot be held responsible for the incorrect application / installation of any product.

LGA Europe Ltd T/A Selectric, Cow Lane, Oldfield Road, Salford, M5 4NB Tel: 0161 745 7777 Fax: 0161 745 2777
Email: sales@selectricuk.co.uk Website: www.selectricuk.co.uk