Data Sheet:

LG202

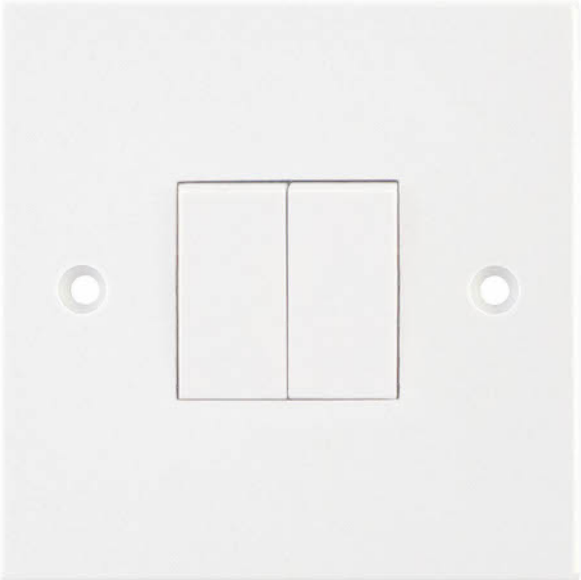

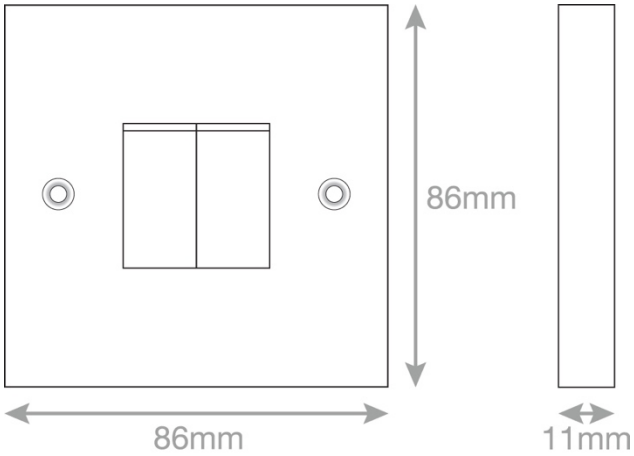

Code:	LG202
Description:	10 Amp plate switch 2 gang 2 way - X-Rated
Range:	Selectric Square
Colour:	White
Ingress Protection:	IP20
Material:	Bakelite
Included:	M3.5 fixing screws
Weight:	0.08kg
Inner Carton Quantity:	10
Inner Carton Weight:	0.8kg
Guarantee:	25 years
Barcode:	5025117998496
Commodity Code:	8536 508000
Standards:	BS EN 60669-1
Packaging:	Poly bag with Euro Slot
ASTA Approval:	Yes
Notes:	• Antimicrobial certified • X-rated for fluorescent or inductive loads • Modular and Euro Media products available within the range • Minimum back box size required: 16mm depth

Selectric reserves the right to withdraw, improve, or modify any design without prior notification.
Selectric cannot be held responsible for the incorrect application / installation of any product.

LGA Europe Ltd T/A Selectric, Cow Lane, Oldfield Road, Salford, M5 4NB Tel: 0161 745 7777 Fax: 0161 745 2777
Email: sales@selectricuk.co.uk Website: www.selectricuk.co.uk