Data Sheet:

LG9492



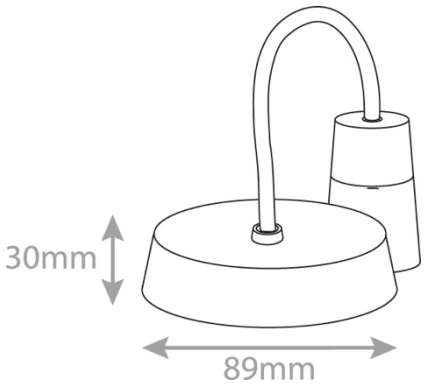

Code:	LG9492
Description:	Pre-Wired T2 Ceiling Rose & Lampholder with 6″ Flex - Bayonet Fitting
Range:	Selectric Square
Colour:	Black
Ingress Protection:	IP20
Material:	Bakelite (Rose) Thermoplastic (Pendant)
Included:	Instructions
Weight:	0.13kg
Inner Carton Quantity:	10
Inner Carton Weight:	1.3kg
Guarantee:	10 years
Barcode:	5025117009277
Commodity Code:	9405 114090
Standards:	BS EN 60598-1
Packaging:	Bag
Notes:	• Traditional style pendant light fitting for use with ceiling lamp shades • Approx 6” drop • Prewired to reduce installation time • Load: 100W max. • Metal screw entry (E27) for secure bulb fitting

Selectric reserves the right to withdraw, improve, or modify any design without prior notification.
Selectric cannot be held responsible for the incorrect application / installation of any product.

LGA Europe Ltd T/A Selectric, Cow Lane, Oldfield Road, Salford, M5 4NB Tel: 0161 745 7777 Fax: 0161 745 2777
Email: sales@selectricuk.co.uk Website: www.selectricuk.co.uk